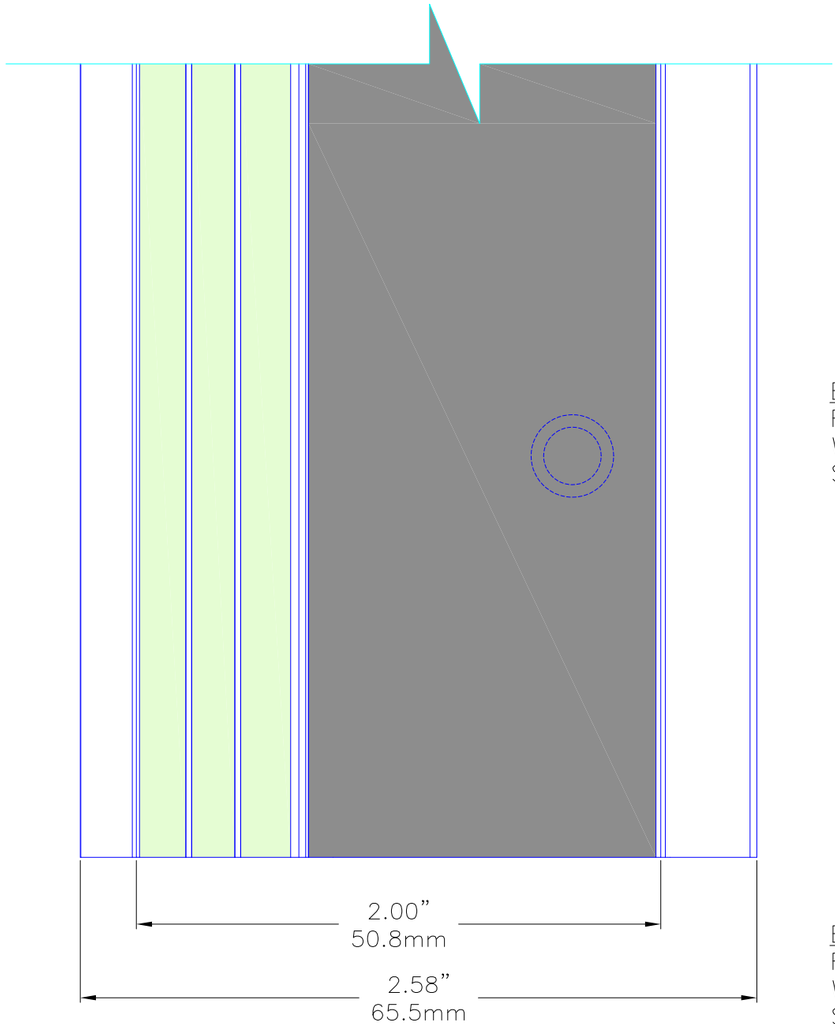

ECOGLO–TOP
F7 SERIES WITH E30 SERIES INSERT

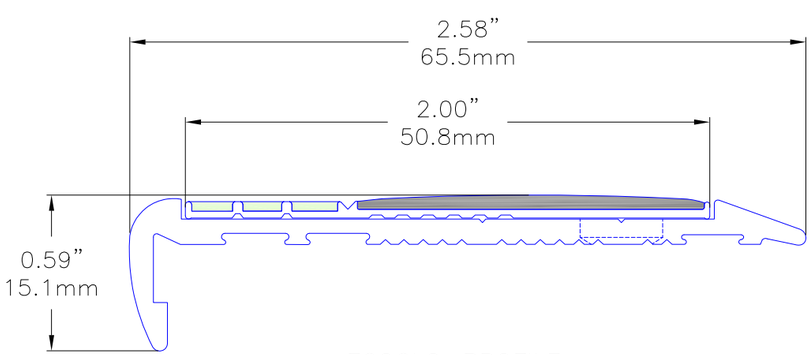

ECOGLO–PROFILE
F7 SERIES WITH E30 SERIES INSERT

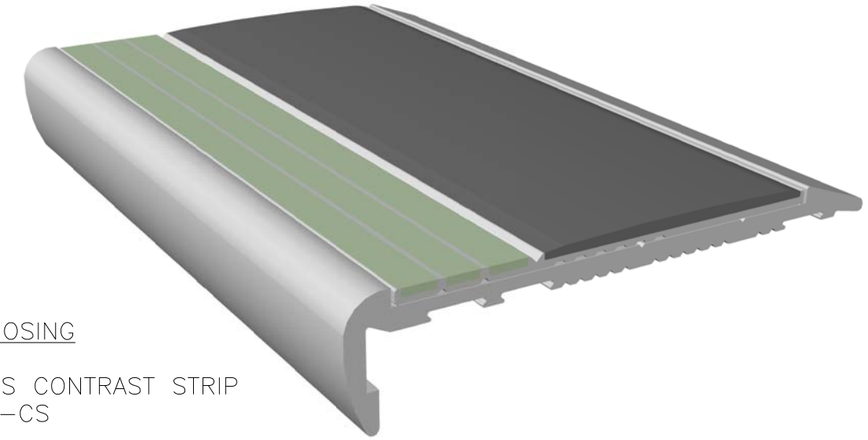

ECOGLO STEP NOSING
F7 SERIES
WITH E30 SERIES CONTRAST STRIP
SEE DWG. E30S–CS

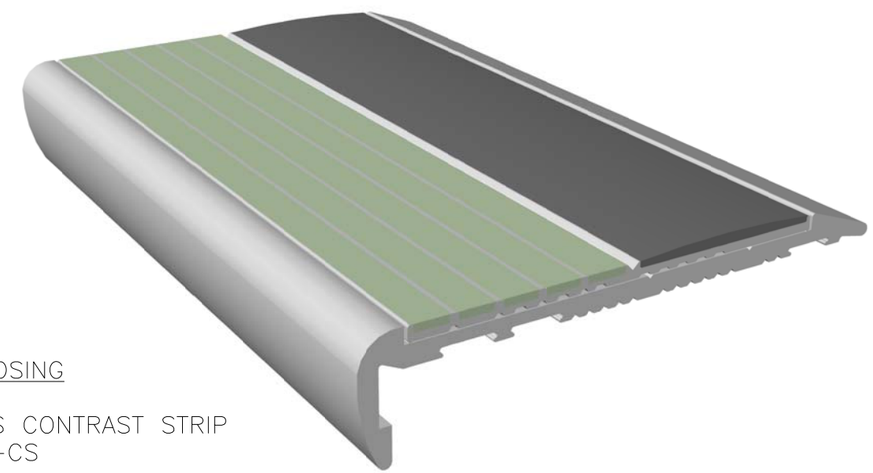

ECOGLO STEP NOSING
FA7 SERIES
WITH E40 SERIES CONTRAST STRIP
SEE DWG. E40S–CS

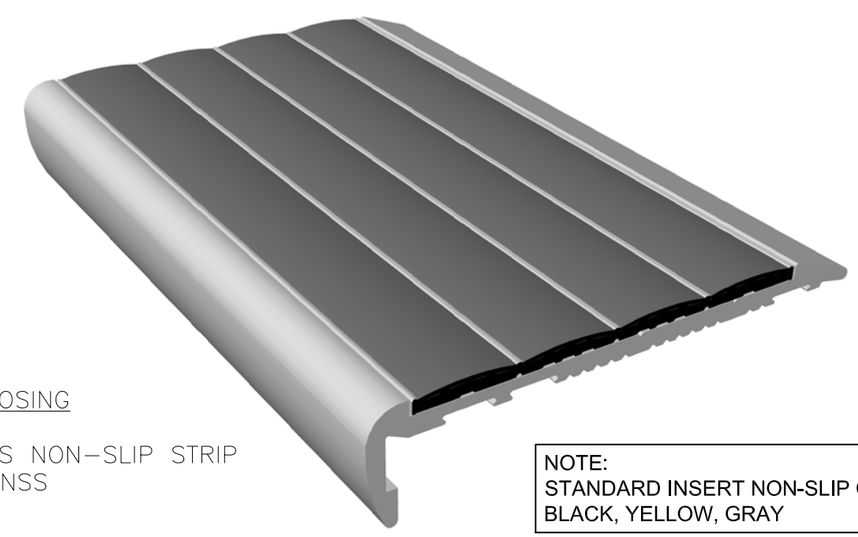

ECOGLO STEP NOSING
F7 SERIES
WITH N10 SERIES NON–SLIP STRIP
SEE DWG. N10–NSS

NOTE:
STANDARD INSERT NON-SLIP COLORS:
BLACK, YELLOW, GRAY

www.us.ecoglo.com

© 2008 ACCESS PRODUCTS INC.
CONFIDENTIAL AND PROPRIETARY DOCUMENT

ECOGLO IS SUBJECT TO PATENTS ISSUED US7297388 AND US6726952 AND OR PENDING IN THE UNITED STATES, AUSTRALIA, CANADA AND INTERNATIONALLY.

® ECOGLO LOGO IS A TRADE MARK REGISTERED IN THE UNITED STATES, CANADA AND INTERNATIONALLY.

MATERIAL LIST

ITEM	DESCRIPTION	PART NO.	QT'Y
1	PREMIUM URETHANE ADHESIVE		
2	PROFAST #8x1–1/4" 18–8 S/S PHILIPS FLAT HEAD CONCRETE SCREW FASTENAL #8x1–1/4" 18–8 FLAT HEAD WOOD SCREW		
3	ANCHOR 0.25" x 1–3/16" (6mm x 30mm) PLASTIC ANCHOR		

REFERENCE DRAWINGS

DWG. NO.	DESCRIPTION
E30S–CS	E20 SERIES–NON–SLIP STRIP
E40S–CS	E40 SERIES–NON–SLIP STRIP
N10–NSS	N10 SERIES–NON–SLIP STRIP

No.	DATE	REVISION	APPR.

SCALE N.T.S

DESIGNED BY	ECOGLO	DATE	2002
DRAWN BY	A.M.	DATE	07/29/08
CHECKED BY	K.S.	DATE	08/11/08
PROJECT MANAGER	D.M.		
TRADE	FLAT NOSING	PART NO.	F7S–FN

MATERIAL
PLM
NON–SLIP
ALUMINUM

SUBJECT
ecoglo®
VISIBLY BETTER
alu

PROJECT
ECOGLO
F7 SERIES FLAT NOSING
WITH E30,E40 & N SERIES INSERTS

DRAWING NO.	SHT. NO.	REV. NO.
F7S–SN	01	00